PRODUCT DATASHEET

SAR 16

Vertical Multistage Centrifugal Pump

SAR SARF

PERFORMANCE CHART AT N=2900 RPM

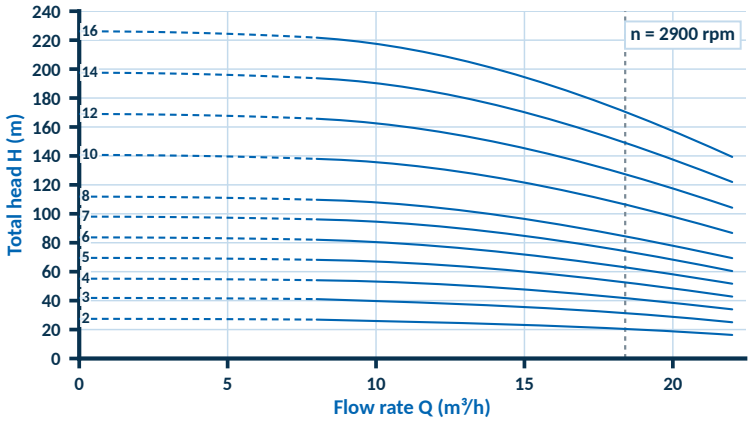

Solid line — published flow range. Broken line — extrapolated to shutoff at zero flow.

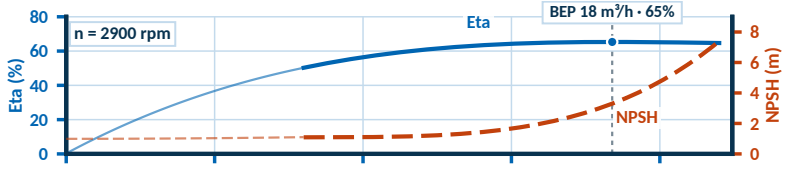

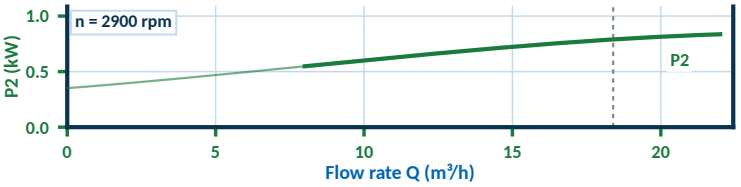

Efficiency and NPSH required (upper), absorbed power P2 (lower), digitised from the manufacturer curve sheet. P2 is the input power per stage.

Typical Applications

- Water supply: raw-water transfer, filtration and boosting duties in waterworks, district distribution, high-rise pressure boosting and packaged booster sets.
- Industrial pressure boosting: process water systems, washing and cleaning plant and high-pressure flushing systems.
- Industrial liquid transfer: cooling and air-conditioning circuits, boiler feed and condensate systems, machine-tool coolant supply, and mild acids and alkalis.
- Water treatment: ultra-filtration, reverse osmosis, distillation, separators and swimming-pool circulation.
- Irrigation: field and farm irrigation, sprinkler systems and drip irrigation.

Operating Conditions

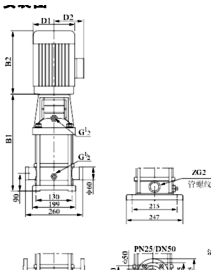

- Thin, clean, non-flammable and non-explosive liquids, free of solid particles or fibres.
- Liquid temperature: standard version −15 °C to +70 °C; hot-water version +70 °C to +120 °C.
- Maximum ambient temperature +40 °C; maximum installation altitude 1000 m.
- Maximum pressure generated ranges from 2.6 bar on SAR 16-2 to 21.8 bar on SAR 16-16, model by model — see Technical Data. Suction and discharge flanges to PN25 / DN50.
- Suction and discharge ports are in line and of equal bore, allowing the pump to be installed directly in a straight pipe run.
- Pump head and motor are coupled by a rigid spacer coupling, so the mechanical seal can be changed without disturbing the pipework.
- Non-self-priming: the pump must be fully primed and the required NPSH maintained at the inlet to avoid cavitation.
- Above +40 °C ambient or above 1000 m altitude the motor output is derated and a larger motor frame must be selected.
- Motor totally enclosed, fan-cooled, protection IP55, insulation class F.
- Optional intelligent controller protects against dry running, phase failure and overload.

Technical Data

Technical data for all 11 models in the SAR 16 series is tabulated on page 2.

SAR 16 Technical Data

Model	Motor P2		Supply / voltage range	Current at 50 Hz (A)			Motor eff. (%)	Rated flow Q (m^3/h)	Head at rated Q (m)	Max. head (m)	Max. flow (m^3/h)	Speed (rpm)	Max. press. (bar)	DN	Dimensions (mm)					Weight (kg)
	kW	HP		Full load In	Start DOL Ist	Soft start Iss									B1	B2	B1+B2	D1	D2	
SAR 16-2	2.2	3	1~ 220-240 V	14	61	41	74.0	16	22	27	22	2900	2.6	DN50	397	290	687	190	155	42
SAR 16-3	3	4	3~ 380-415 V	5.9	38	18	85.8	16	34	41	22	2900	4.0	DN50	452	345	797	197	165	50
SAR 16-4	4	5.5	3~ 380-415 V	7.7	50	23	86.8	16	46	54	22	2900	5.3	DN50	497	355	852	230	188	59
SAR 16-5	5.5	7.5	3~ 380-415 V	11	68	32	87.8	16	58	68	22	2900	6.7	DN50	562	390	952	260	208	76
SAR 16-6	5.5	7.5	3~ 380-415 V	11	68	32	87.8	16	70	82	22	2900	8.0	DN50	607	390	997	260	208	77
SAR 16-7	7.5	10	3~ 380-415 V	14	91	42	88.5	16	82	96	22	2900	9.4	DN50	652	390	1042	260	208	84
SAR 16-8	7.5	10	3~ 380-415 V	14	91	42	88.5	16	94	110	22	2900	10.8	DN50	697	390	1087	260	208	86
SAR 16-10	11	15	3~ 380-415 V	20	142	61	89.7	16	118	138	22	2900	13.5	DN50	875	500	1375	330	255	158
SAR 16-12	11	15	3~ 380-415 V	20	142	61	89.7	16	141	166	22	2900	16.3	DN50	965	500	1465	330	255	161
SAR 16-14	15	20	3~ 380-415 V	27	190	82	90.5	16	166	194	22	2900	19.0	DN50	1055	500	1555	330	255	174
SAR 16-16	15	20	3~ 380-415 V	27	190	82	90.5	16	189	222	22	2900	21.8	DN50	1145	500	1645	330	255	178

Maximum pressure is the pressure the pump itself generates at its maximum head; the sum of inlet pressure and pump pressure must not exceed the casing rating. Currents are calculated nominal values for a 2-pole IE3 motor (single phase at 230 V, three phase at 400 V); In is the full-load running current, Ist the direct-on-line starting current and Iss the current with a soft starter set to ramp at 3 x In (adjustable, typically 2 to 4 x In). A soft starter limits inrush and mechanical shock; it does not raise running efficiency, and adds about 0.1 to 0.5 % loss unless it is bypassed once up to speed. Motor efficiency is the nominal IE3 figure at full load. direct-on-line. **Confirm against the motor nameplate before sizing cable, starter or overload.**

Maximum head is the head at the lowest published flow; maximum flow is the highest published flow for the series. Motor totally enclosed, fan-cooled, IP55, insulation class F, 2-pole, 3 × 380–415 V / 50 Hz. HP figures are the nominal standard-frame equivalents of the kW ratings. Motors up to and including 2.2 kW are single-phase as standard, 3 kW and above three-phase; 3 x 200-220 V and other supply voltages are available to special order. Flanges to PN25 / DN50. Weights are for the pump with standard motor.

Model Designation

SAR F 16 – 2 / 1

SAR	Light vertical multistage centrifugal pump
F	Wetted parts in stainless steel AISI 304 or 316L. Omitted on the standard cast-iron construction, which is designated SAR.
16	Rated flow in m^3/h — identifies the series
2	Number of chambers (stages)
1	Number of impellers fitted. Where this is fewer than the number of chambers, the remaining chamber carries no impeller and the pump delivers proportionally less head. The element is omitted when every chamber carries an impeller, which is the case for all 11 models in this series, e.g. SAR 16-16.

SAR 16

Performance Table

Total head H (m) against flow rate Q (m^3/h) at 2900 rpm, tested on clean water at 20 °C (kinematic viscosity 1 mm^2/s, air-free). Tolerances to ISO 9906, Annex A. Motor power P2 is the standard motor rating for each model.

Model	Motor			Q (m^3/h)							
	kW	HP	Supply / voltage range	8	10	12	14	16	18	20	22
SAR 16-2	2.2	3	1~ 220-240 V	27	26	25	24	22	21	19	16
SAR 16-3	3	4	3~ 380-415 V	41	40	38	37	34	32	29	25
SAR 16-4	4	5.5	3~ 380-415 V	54	53	52	49	46	43	38	34
SAR 16-5	5.5	7.5	3~ 380-415 V	68	67	65	62	58	54	48	43
SAR 16-6	5.5	7.5	3~ 380-415 V	82	80	78	74	70	64	58	52
SAR 16-7	7.5	10	3~ 380-415 V	96	95	91	87	82	76	68	61
SAR 16-8	7.5	10	3~ 380-415 V	110	108	104	99	94	86	77	70
SAR 16-10	11	15	3~ 380-415 V	138	136	131	125	118	109	97	87
SAR 16-12	11	15	3~ 380-415 V	166	162	157	150	141	130	116	105
SAR 16-14	15	20	3~ 380-415 V	194	190	184	175	166	152	136	122
SAR 16-16	15	20	3~ 380-415 V	222	217	210	200	189	174	156	140

Select the duty point within the published flow range. Operating far to the right of the range overloads the motor; operating far to the left causes heat build-up in the pump. The stainless-steel construction is designated SARF and has identical hydraulic performance.

DIMENSIONS

SAR 16

Dimensions and Connections

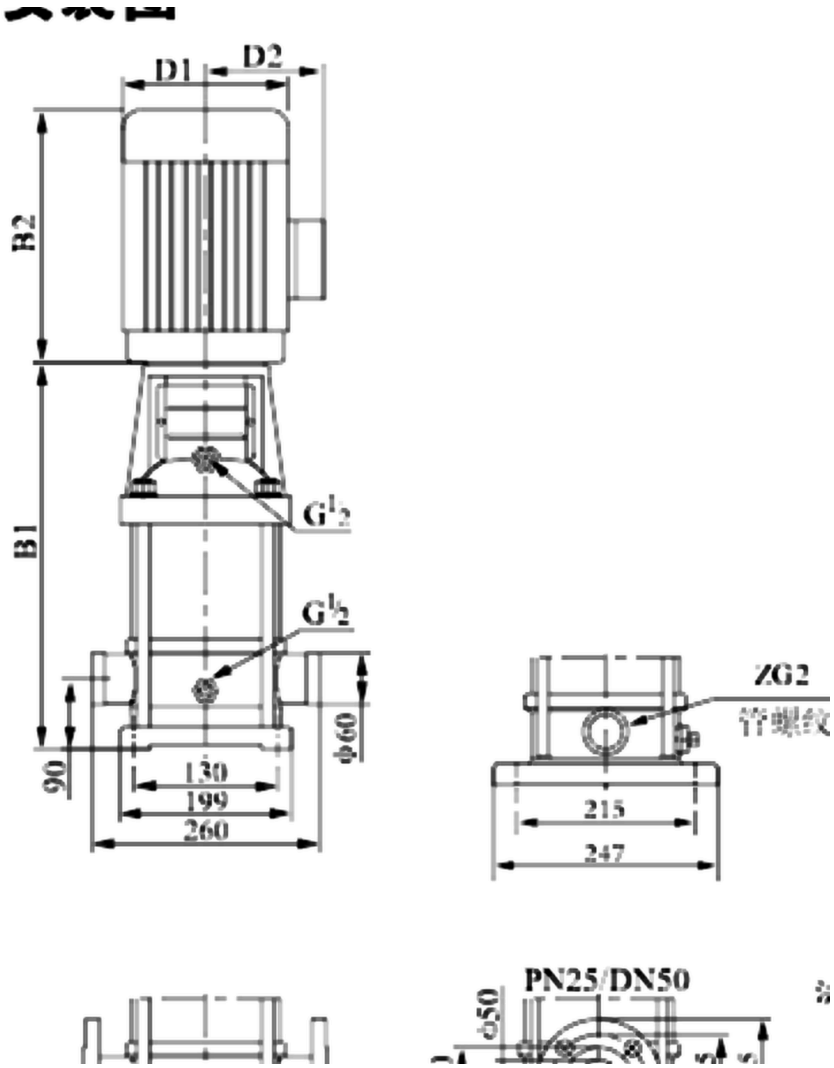

B1 base to motor flange
B2 motor height
B1+B2 overall height
D1 across motor frame
D2 across base

All dimensions in mm. Suction and discharge are in line and of equal bore, DN50, flanges to PN25 / DN50.

Per-model dimensions and weights are tabulated in the Technical Data pages. Single-phase and flameproof motors alter the external dimensions.