PRODUCT DATASHEET

SATTE SM 3

Horizontal Multistage Centrifugal Pump

SATTE SM 3

PERFORMANCE CHART AT n=2850 RPM

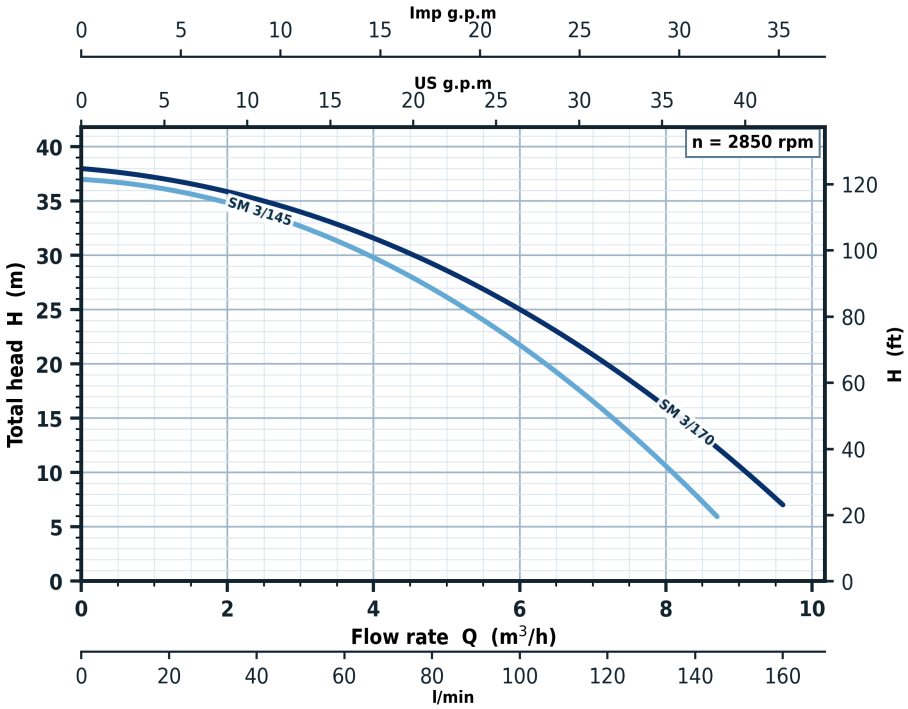

Curves show the published flow range for each model. Clean water at 20 C, tolerances to ISO 9906 Annex A.

Typical Applications

- Domestic and commercial pressure boosting where high head is required at modest flow.
- Packaged booster sets serving multi-storey buildings and high-rise risers.
- Water supply from storage tanks to distribution networks and header tanks.
- Sprinkler and drip irrigation systems requiring sustained pressure.
- Washing and cleaning plant, and general industrial water transfer.

Operating Conditions

- Clean water, non-flammable and non-explosive, free of solid particles and fibres.
- Liquid temperature to +60 C; maximum ambient temperature +40 C.
- Non-self-priming: the pump must be fully primed before starting.
- Keep the suction line short, airtight and fully flooded to avoid cavitation.
- Motor totally enclosed, fan-cooled, protection IP44 to IP55, insulation class B.
- All models in this series have 3 stages; the figure after the oblique is the pump frame size, which sets the flow range.
- Do not run dry; a low-level or flow switch is recommended on tank-fed installations.

Materials of Construction

- **Pump body:** Stainless steel AISI 304
- **Impeller:** Stainless steel AISI 304
- **Mechanical seal:** Ceramic / graphite
- **Motor housing:** Aluminium alloy
- **Shaft:** Stainless steel AISI 431
- **Diffuser:** Stainless steel AISI 304

TECHNICAL DATA

SATTE SM 3 Technical Data

Technical Data

	Motor		Voltage	Current (A)		m	m3/h		Inch	kg	mm
Model	kW	HP	Supply	In	Ist	Max H	Max Q	rpm	DN	Weight	L x W x H
SM 3/145	0.75	1.0	1~ 220-240 V	6.0	27	37.0	9	2850	1 1/4"x1 1/4"	12.6	440x190x210
SM 3/170	1.0	1.3	1~ 220-240 V	8.1	36	38.0	10	2850	1 1/4"x1 1/4"	13.1	440x190x210

Head-flow data is the published performance of the series, tested on clean water at 20 C at 2850 rpm. Tolerances to ISO 9906 Annex A. Maximum head is the head at zero flow; maximum flow is the highest published flow for the model.

SUCTION CONDITIONS: this is a surface-mounted series operating on suction lift. The achievable lift falls as liquid temperature and site altitude increase. At approximately 1,200 m altitude, atmospheric pressure is about 12% below sea level, reducing achievable suction lift by roughly 1.2 m. Keep the suction line short, airtight and fully flooded.

Currents are calculated nominal values for a two-pole motor (single phase at 230 V, three phase at 400 V). In is the full-load running current and Ist the direct-on-line starting current. Confirm against the motor nameplate before sizing cable, starter or overload.

Select the duty point within the published flow range. Operating far to the right of the range overloads the motor; operating far to the left causes heat build-up in the pump.

Dimensions are pump overall length x width x height in millimetres, as published for the series. Net weight is for the pump with standard motor and cable. Currents shown are the published full-load values where available.

Performance Table

Total head H (m) against flow rate Q (m3/h) at 2850 rpm, on clean water at 20 C. Motor power P2 is the standard motor rating for each model.

Motor			Q (m3/h)										
Model	kW	HP	0	1.2	2.4	3.6	4.8	6	7.2	7.8	8.4	8.7	9.6
SM 3/145	0.75	1.0	37.0	36.0	34.0	31.0	27.0	22.0	15.0	12.0	8.0	6.0	
SM 3/170	1.0	1.3	38.0	37.0	35.0	33.0	29.0	25.0	20.0	17.0	14.0	12.3	7.0

Blank cells indicate flows outside the published range for that model.
Solids handling: Not suitable for solids-bearing liquids. Discharge connection: 1" x 1" to 1 1/4" x 1 1/4".

Dimensions

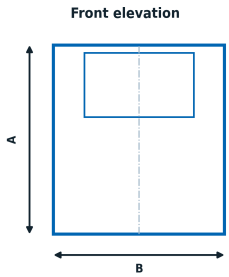

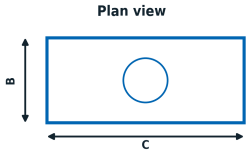

L overall length
W overall width
H overall height

Dimensioned outline for the series. Per-model overall dimensions are tabulated above. Certified drawings are available on request for final design.

SATTE SM 3 Exploded View

Exploded View
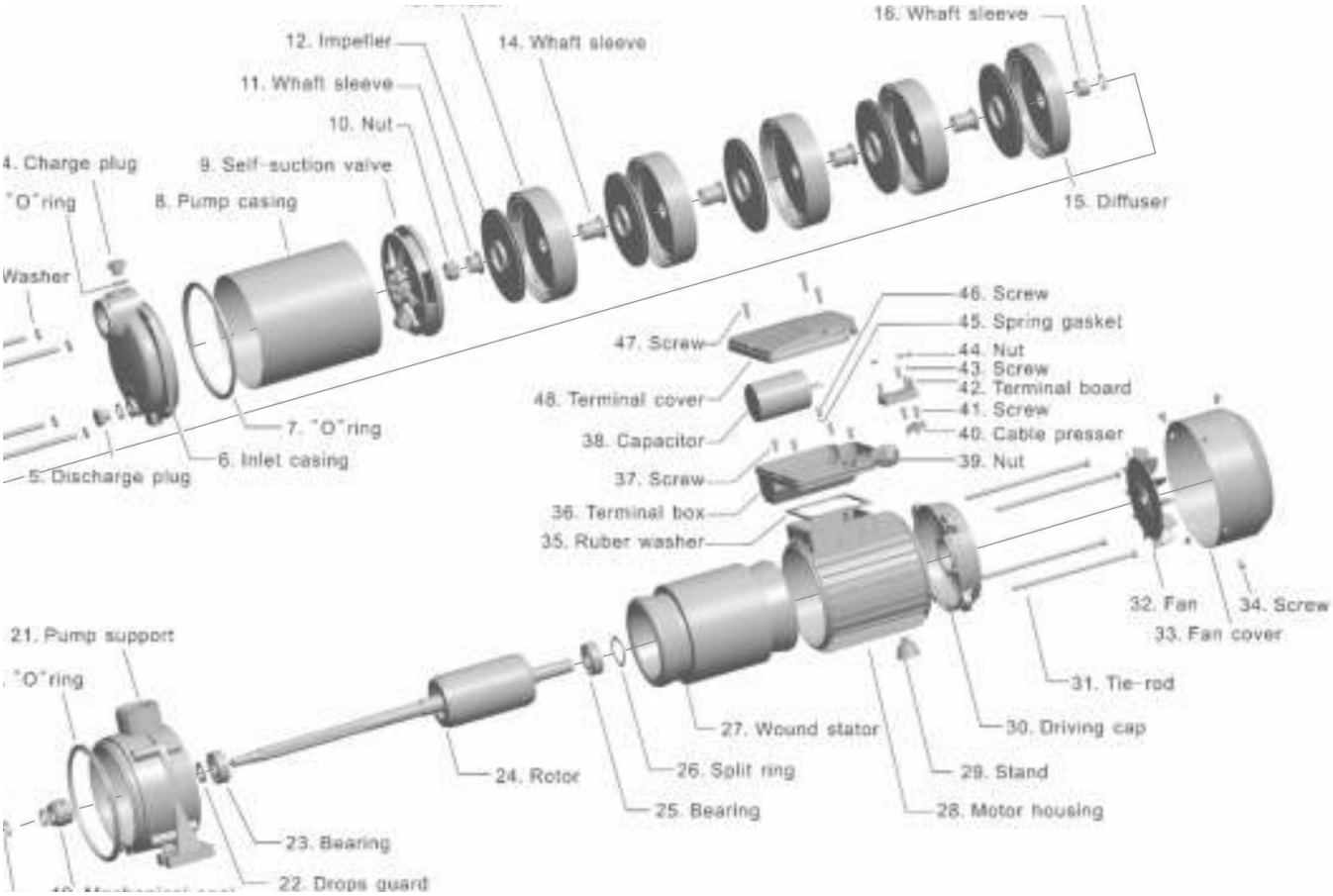
Component breakdown for the series, for identification of parts when ordering spares. Item numbers correspond to the manufacturer parts list; quote the SATTE model and the item number when requesting spares.